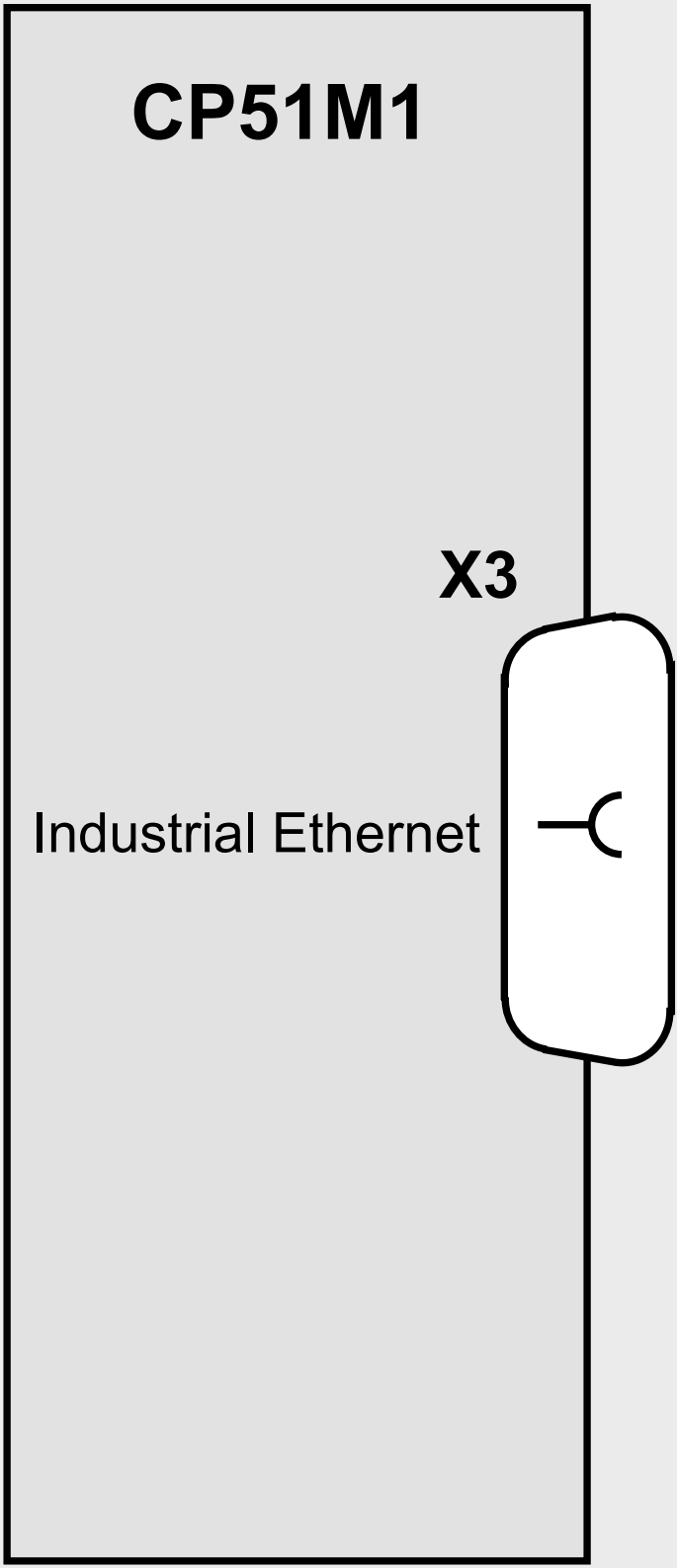
CP51M1
X3
Industrial Ethernet