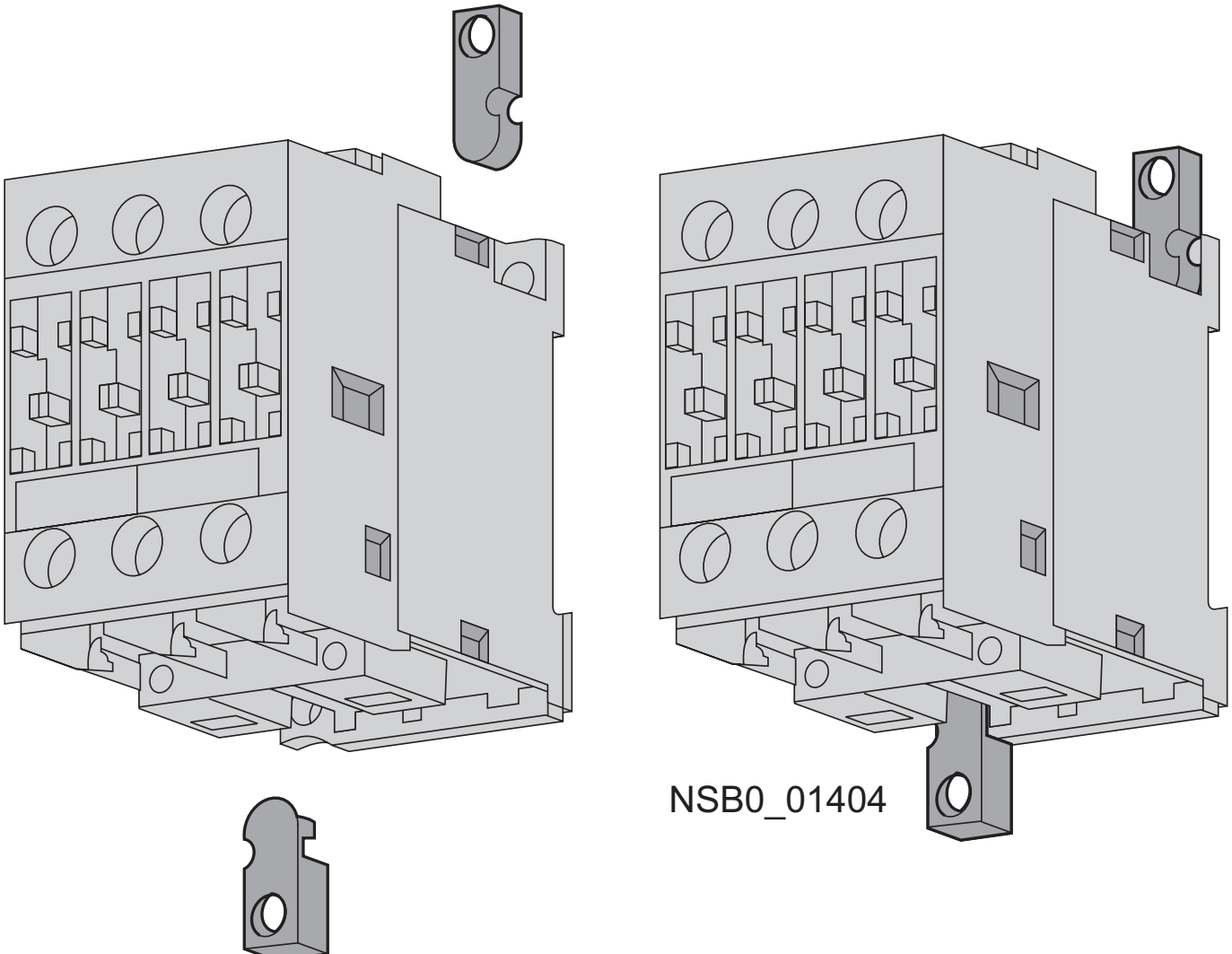
NSB0_01404