Dimensions

Cast-iron series 1LG6
Frame sizes 180 M to 250 M

Dimensional drawings

Type of construction IM B3

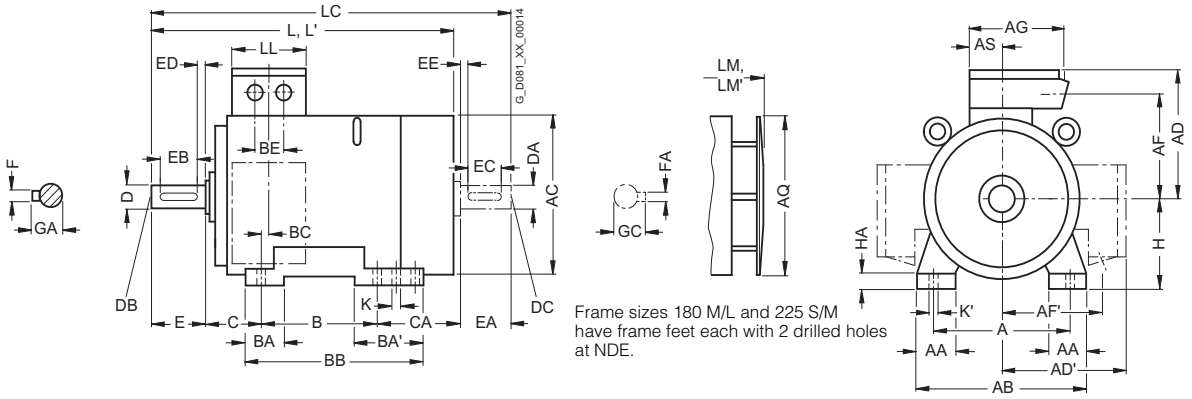

Frame sizes 180 M/L and 225 S/M have frame feet each with 2 drilled holes at NDE.

Types of construction IM B5 and IM V1

For flange dimensions, see section flange dimension (Z = the number of retaining holes)

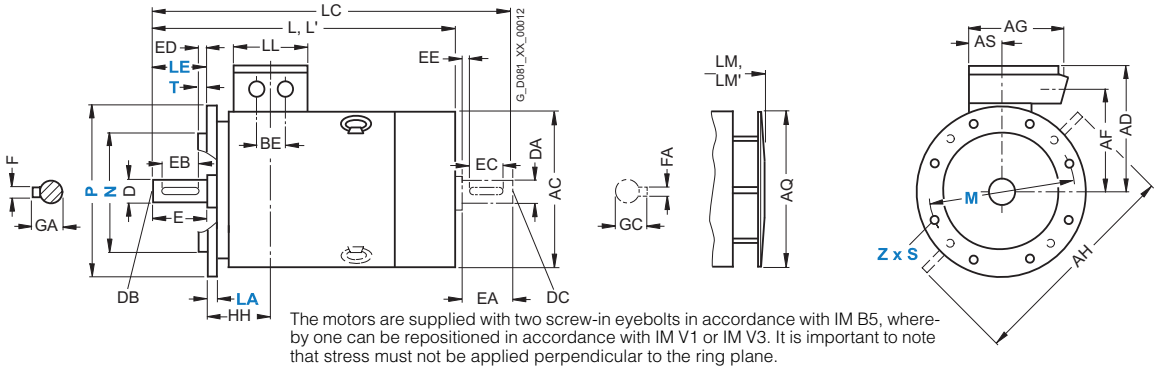

The motors are supplied with two screw-in eyebolts in accordance with IM B5, whereby one can be repositioned in accordance with IM V1 or IM V3. It is important to note that stress must not be applied perpendicular to the ring plane.

For motor			Dimension designation acc. to **IEC**																					
Frame size	Type	Number of poles	A	AA	AB	AC[1]	AD	AD'	AF	AF'	AG	AH	AQ	AS	B*	BA	BA'	BB	BC	BE	C	CA*	H	HA
180 M	1LG6183	2 4	279	65	339	363	262	262	220	220	152	452	340	71	241	70	111	328	36	54	121	253 202	180	20
180 L	1LG6186	4, 6, 8	279	65	339	363	262	262	220	220	152	452	340	71	279	70	111	328	36	54	121	215	180	20
200 L	1LG6206	2, 6	318	70	378	402	300	300	247	247	260	512	340	96	305	80	80	355	63	85	133	177	200	25
	1LG6207	2, 6 4, 8	318	70	378	402	300	300	247	247	260	512	340	96	305	80	80	355	63	85	133	234 177	200	25
	1LG6208	2	318	70	378	402	300	300	247	247	164	486	340	96	305	80	80	355	63	85	133	294	200	25
225 S	1LG6220	4, 8	356	80	436	442	325	325	272	272	260	556	425	96	286	85	110	361	47	85	149	218	225	34
225 M	1LG6223	2 4, 6, 8	356	80	436	442	325	325	272	272	260	556	425	96	311	85	110	361	47	85	149	253	225	34
	1LG6228	2 4, 6	356	80	436	442	325	325	272	272	260	556	425	96	311	85	110	361	47	85	149	303	225	34
250 M	1LG6253	2 4 6, 8	406	100	490	495	392	392	308	308	300	620	470	118	349	100	100	409	69	110	168	235 305 235	250	40
	1LG6258	2 4, 6	406	100	490	495	392	392	308	308	300	620	470	118	349	100	100	409	69	110	168	305	250	40

* This dimension is assigned in DIN EN 50347 to the frame size listed.

[1] Measured across the bolt heads.

Dimensional drawings (continued)

Type of construction IM B35

For flange dimensions, see section flange dimension (Z = the number of retaining holes)

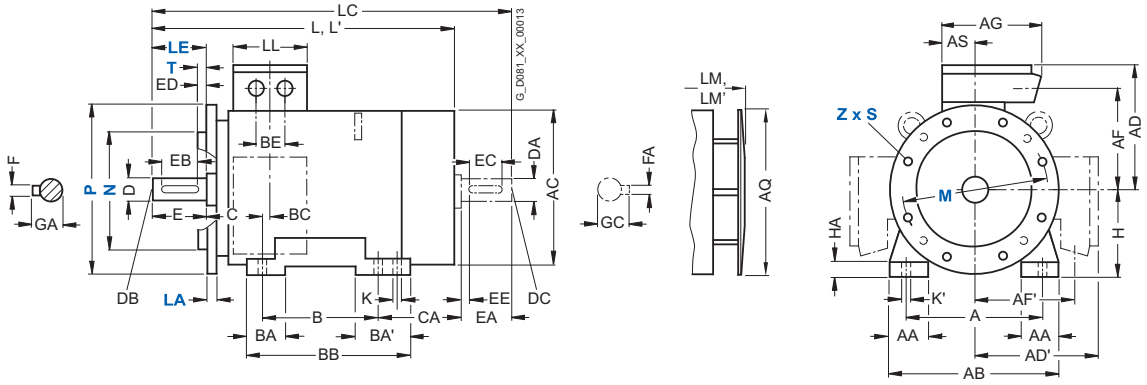

For motor			Dimension designation acc. to **IEC**							DE shaft extension							NDE shaft extension						
Frame size	Type	Number of poles	HH	K	K'	L	LC	LL	LM	D	DB	E	EB	ED	F	GA	DA	DC	EA	EC	EE	FA	GC
180 M	1LG6183	2	157	15	19	720	835	132	810	48	M16	110	100	5	14	51.5	48	M16	110	100	5	14	51.5
		4				669	784		759														
180 L	1LG6186	4, 6, 8	157	15	19	720	835	132	810	48	M16	110	100	5	14	51.5	48	M16	110	100	5	14	51.5
200 L	1LG6206	2, 6	196	19	25	754	835	192	844	55	M20	110	100	5	16	59	55	M20	110	100	5	16	59
	1LG6207	2, 6	196	19	25	811	892	192	901	55	M20	110	100	5	16	59	55	M20	110	100	5	16	59
		4, 8				720	835		810														
	1LG6208	2	196	19	25	871	952	192	961	55	M20	110	100	5	16	59	55	M20	110	100	5	16	59
225 S	1LG6220	4, 8	196	19	25	789	903	192	889	60	M20	140	125	10	18	64	55	M20	110	100	5	16	59
225 M	1LG6223	2	196	19	25	853	933	192	953	55	M20	110	100	5	16	59	48	M16	110	100	5	14	51.5
		4, 6, 8				849	963		949	60	M20	140	125	10	18	64	55	M20	110	100	5	16	59
	1LG6228	2	196	19	25	903	983	192	1003	55	M20	110	100	5	16	59	48	M16	110	100	5	14	51.5
		4, 6				899	1013		999	60	M20	140	125	10	18	64	55	M20	110	100	5	16	59
250 M	1LG6253	2	237	24	30	924	1002	236	1024	60	M20	140	125	10	18	64	55	M20	110	100	5	16	59
		4				957	1102		1057	65	M20	140	125	10	18	69	60	M20	140	125	10	18	64
		6, 8				887	1032		987	65	M20	140	125	10	18	69	60	M20	140	125	10	18	64
	1LG6258	2	237	24	30	994	1102	236	1094	60	M20	140	125	10	18	64	55	M20	110	100	5	16	59
		4, 6				957			1057	65	M20	140	125	10	18	69	60	M20	140	125	10	18	64